BROAN®

MODELS 170F, 174F & 178F FAN FORCED WALL HEATERS FINISH ASSEMBLIES

FOR USE WITH BROAN MODEL 171H ROUGH-IN HOUSING

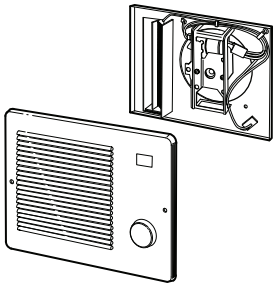

READ AND SAVE THESE INSTRUCTIONS

IMPORTANT INSTRUCTIONS

READ ALL INSTRUCTIONS BEFORE INSTALLING OR USING THIS HEATER.

To reduce the risk of fire, electric shock, or injury to persons, observe the following:

1. Use this unit only in the manner intended by the manufacturer. If you have questions, contact the manufacturer at the address or telephone number listed in the warranty.
2. Before servicing or cleaning unit, switch power off at service panel and lock the service disconnecting means to prevent power from being switched on accidentally. When the service disconnecting means cannot be locked, securely fasten a prominent warning device, such as a tag, to the service panel.
3. Installation work and electrical wiring must be done by a qualified person(s) in accordance with all applicable codes and standards, including fire-rated construction codes and standards.
4. When cutting or drilling into wall or ceiling, do not damage electrical wiring and other hidden utilities.
5. This heater is hot when in use. To avoid burns, do not let bare skin touch hot surfaces. Keep combustible materials, such as furniture, pillows, bedding, papers, clothes, etc. and curtains at least 3 feet (0.9 m) from the front of the heater.
6. Extreme caution is necessary when any heater is used by or near children or invalids and whenever the heater is left operating and unattended.
7. Do not operate any heater after it malfunctions. Disconnect power at service panel and have heater inspected by a reputable electrician before reusing.
8. Do not use outdoors.
9. To disconnect heater, turn controls to off, and turn off power to heater circuit at main disconnect panel (or operate internal disconnect switch, if provided).
10. Do not insert or allow foreign objects to enter any ventilation or exhaust opening, as this may cause an electric shock or fire, or damage the heater.
11. To prevent a possible fire, do not block air intakes or exhaust in any manner.
12. A heater has hot and arcing or sparking parts inside. Do not use it in areas where gasoline, paint, or flammable vapors or liquids are used or stored.
13. Use this heater only as described in this manual. Any other use not recommended by the manufacturer may cause fire, electric shock, or injury to persons.
14. Install heater at least 6 inches from floor or any adjacent wall.
15. To avoid electrical shock: Do not install unit in a tub or shower enclosure or any location where it may come in contact with water. Never place a switch where it can be reached from a tub or shower.
16. This product may ONLY be installed horizontally in a wall. Do not mount in any other position.
17. Do not connect heater to dimmer switch or speed control.
18. This product must be grounded.

SAVE THESE INSTRUCTIONS

PLANNING

This wall heater finish assembly is intended for installation into a Broan Model 171H rough-in housing — after the wall has been completed.

The heater can be operated using the Broan Model 86W Line-Voltage Thermostat from a wall location or the Broan Model 83 Integral Thermostat installed into heater. Purchase the control separately.

The table below lists the ratings for each model.

MODELS	VOLTS	AMPS	WATTS	BTU/HR
170F	**120**	**8.33/**4.16	**1000**/500	**3413/**1707
	240	4.16	1000	3413
	208	3.61	750	2560
174F	**120**	**12.5/**6.25	**1500/**750	**5120/**2560
	240	6.25	1500	5120
	208	5.41	1125	3640
178F	**240**	**8.33/**4.16	**2000/**1000	**6827/**3413
	208	7.21/3.61	1500/750	5120/2560

BOLD ratings are factory wired. See "OPTIONAL WIRING CONVERSIONS" section for wattage and voltage conversion instructions.

Follow these basic steps when installing this heater:

- Remove the housing mask.
- Fasten finish assembly inside housing.
- Plug assembly in.
- Attach grille.

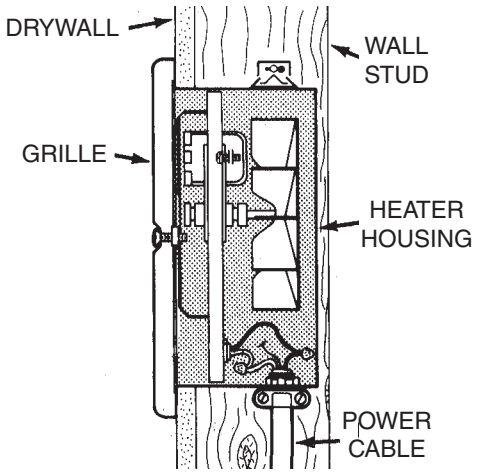

INSTALLATION

WARNING: To reduce the risk of fire, do not store or use gasoline or other flammable vapors and liquids in the vicinity of the heater.

CAUTION: High temperature, risk of fire, keep electrical cords, drapery, furnishings, and other combustibles at least 3 feet (0.9 m) from the front of the heater and away from the side and rear.

1. **Remove housing mask.**
   Make sure wall has been finished (including paint or wall paper, etc.) Take out and discard the cardboard mask from inside of housing.

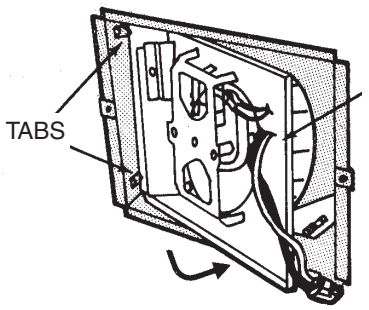

2. **Install heater assembly into housing.**

   Place element end of heater assembly behind the tabs on the left side of housing. Pivot the assembly in and fasten with retaining screw from parts bag.

   Plug wiring harness into receptacle.

3. **Provide desired control.**

   The heater finish assembly has no adjustable thermostat control.

   If a wall-mounted control has been pre-wired, nothing else need be done.

   If a built-in thermostat is desired, purchase and insert the Broan Model 83 Integral Thermostat at this time.

WIRING

Installation work and electrical wiring must be done by a qualified person(s) in accordance with all applicable codes and standards, including fire-rated construction codes and standards.

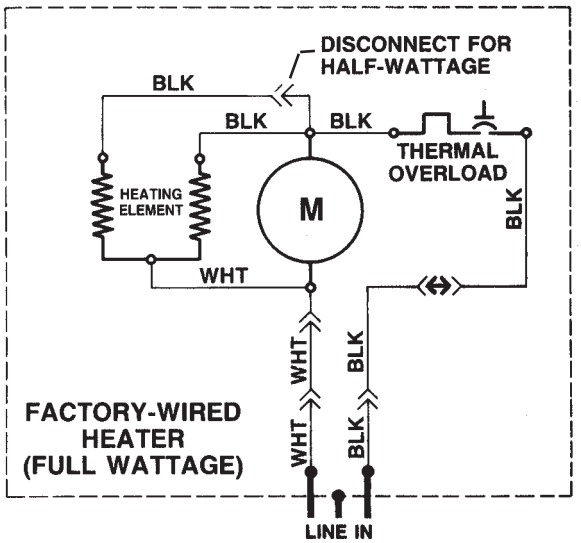

OPTIONAL WIRING CONVERSIONS

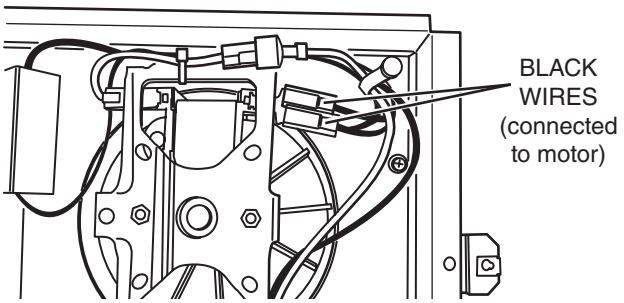

1. Conversion to half-wattage.

The heater will produce less heat and use less electricity if converted to half-wattage.

Disconnect ONE of the black wires with an insulated terminal from the motor.

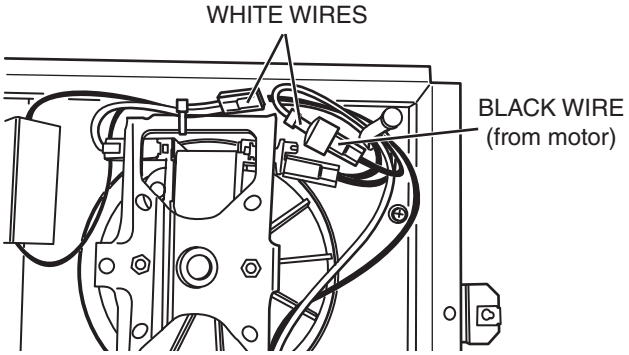

2. 120 VAC to 240 VAC Conversion.
(Factory-wired 120 VAC Models 170F and 174F ONLY)

1) Disconnect ONE of the black wires with an insulated terminal from the motor.
2) Disconnect the two (2) white wires with insulated terminals from each other. Do not remove wire from beneath plastic wire tie.
3) Connect black wire to white wire.

NOTE: When heater is converted from 120 VAC to 240 VAC, half-wattage conversion is not possible

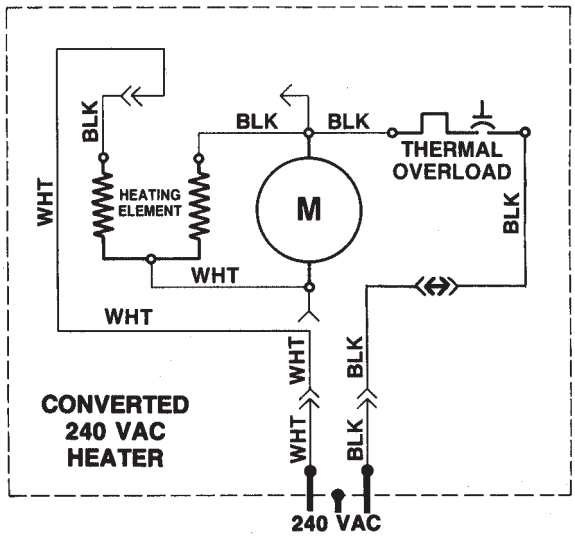

COMPLETE THE INSTALLATION

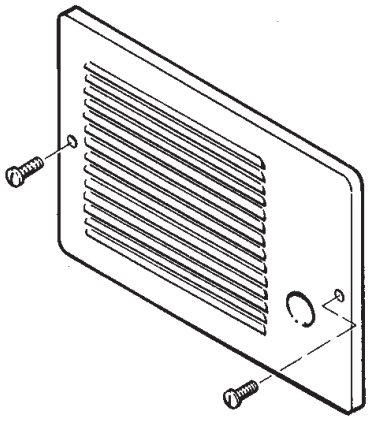

1. **Attach grille.**

   Fasten grille to heater with two (2) screws from parts bag.

2. **Check operation.**
   Turn on power at service entrance. Turn thermostat to its highest setting and make sure heating element and blower come on. Then turn it to its lowest setting and make sure element and blower shut off.

OPERATION

Before using heater, make sure heater has been properly installed according to installation steps beginning with the "PLANNING" section on page 1.

MAINTENANCE

The following maintenance and cleaning tasks can be performed by the user. All other servicing must be performed by an authorized technician If you have any questions, please consult with our customer service department at: 800-558-1711.

THERMAL OVERLOAD PROTECTOR

If heater fails to operate when thermostat is turned to its highest setting: Turn power off at service entrance. Remove knob and grille and press button marked “RESET”.

LUBRICATION

The heater is permanently lubricated and never needs oiling or disassembly.

CLEANING

Clean heater once a month as follows:

1. Turn off power at service panel.
2. Make sure heating element is cool.
3. Use a soft brush attachment to gently vacuum grille openings or wipe grille clean with a soft cloth.
4. Restore power.

CAUTION: METAL AND ELECTRICAL PARTS SHOULD NEVER BE IMMERSED IN WATER.

WARRANTY

BROAN-NUTONE ONE YEAR LIMITED WARRANTY

Broan-NuTone warrants to the original consumer purchaser of its products that such products will be free from defects in materials or workmanship for a period of one year from the date of original purchase. THERE ARE NO OTHER WARRANTIES, EXPRESS OR IMPLIED, INCLUDING, BUT NOT LIMITED TO, IMPLIED WARRANTIES OF MERCHANTABILITY OR FITNESS FOR A PARTICULAR PURPOSE.

During this one-year period, Broan-NuTone will, at its option, repair or replace, without charge, any product or part which is found to be defective under normal use and service.

THIS WARRANTY DOES NOT EXTEND TO FLUORESCENT LAMP STARTERS, TUBES, HALOGEN AND INCANDESCENT BULBS, FUSES, FILTERS, DUCTS, ROOF CAPS, WALL CAPS AND OTHER ACCESSORIES FOR DUCTING. This warranty does not cover (a) normal maintenance and service or (b) any products or parts which have been subject to misuse, negligence, accident, improper maintenance or repair (other than by Broan-NuTone), faulty installation or installation contrary to recommended installation instructions.

The duration of any implied warranty is limited to the one-year period as specified for the express warranty. Some states do not allow limitation on how long an implied warranty lasts, so the above limitation may not apply to you.

BROAN-NUTONE'S OBLIGATION TO REPAIR OR REPLACE, AT BROAN-NUTONE'S OPTION, SHALL BE THE PURCHASER'S SOLE AND EXCLUSIVE REMEDY UNDER THIS WARRANTY. BROAN-NUTONE SHALL NOT BE LIABLE FOR INCIDENTAL, CONSEQUENTIAL OR SPECIAL DAMAGES ARISING OUT OF OR IN CONNECTION WITH PRODUCT USE OR PERFORMANCE. Some states do not allow the exclusion or limitation of incidental or consequential damages, so the above limitation or exclusion may not apply to you.

This warranty gives you specific legal rights, and you may also have other rights, which vary from state to state. This warranty supersedes all prior warranties.

To qualify for warranty service, you must (a) notify Broan-NuTone at the address or telephone number below, (b) give the model number and part identification and (c) describe the nature of any defect in the product or part. At the time of requesting warranty service, you must present evidence of the original purchase date.

Broan-NuTone LLC, 926 W. State Street, Hartford, Wisconsin 53027 www.broan.com 800-558-1711

BROAN®

SERVICE PARTS

FAN-FORCED WALL HEATER

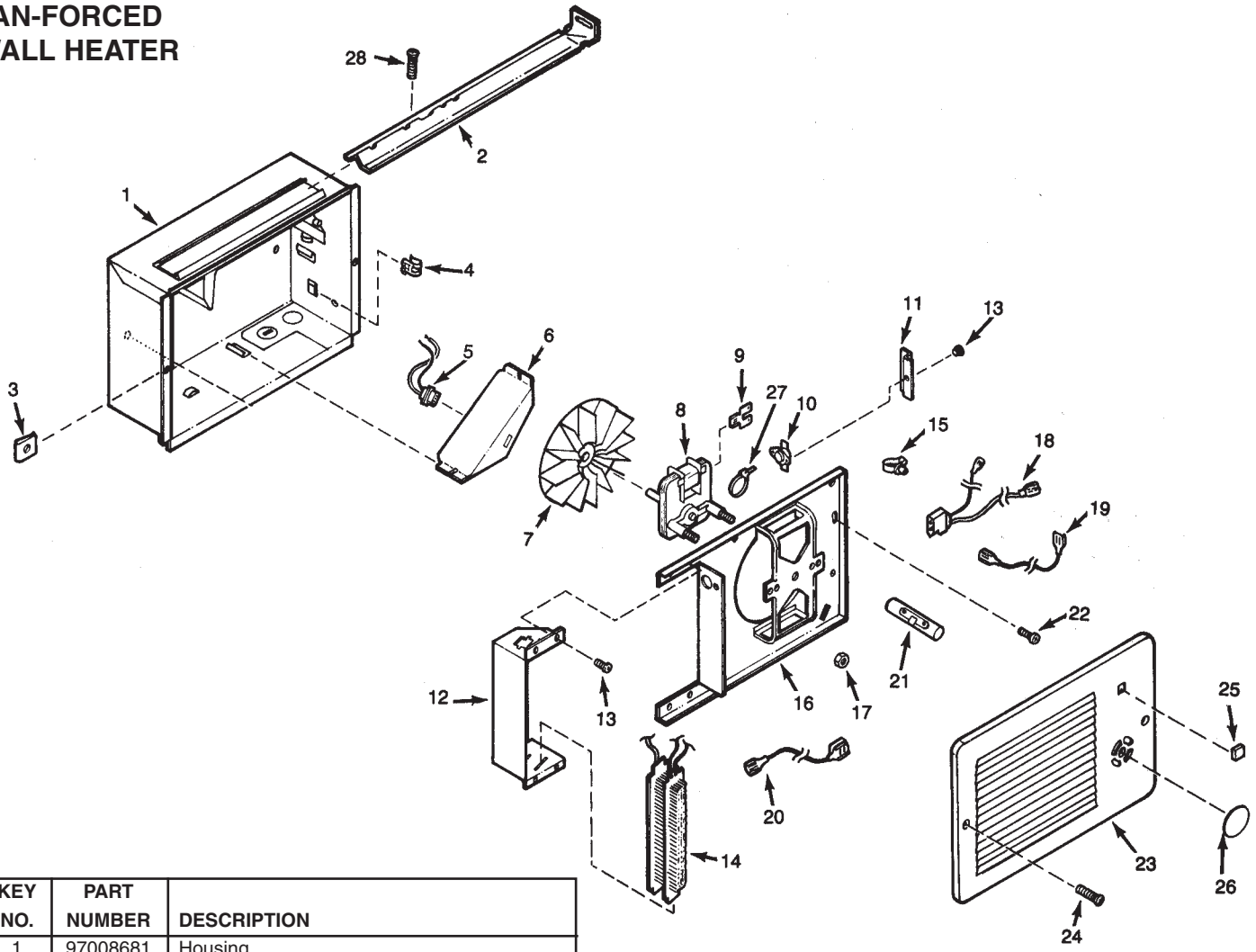

KEY NO.	PART NUMBER	DESCRIPTION
1	97008681	Housing
2	98003036	Mounting Bracket (2 Required)
3	99260512	#8-18 Sheet Metal Nut (2 Required)
4	99390015	Grounding Clip
5	97005422	Receptacle Assembly
6	98006975	Wiring Cover
7	99020130	Blower Wheel
8	99080248	Motor (Models 170F and 174F)
	99080252	Motor (Model 178F)
9	99270735	Tab Adapter
10	99030194	Thermal Overload
11	99271091	Guard
12	98006974	Element Bracket
13	99150491	Screw, #8-18 x 3/8 Ph. Pan Head (5 Required)
14	99270741	Heating Element (Model 170F)
	99270725	Heating Element (Model 174F)
	99270742	Heating Element (Model 178F)
15	93270619	Wire Clamp
16	97008682	Partition Plate Assembly

KEY NO.	PART NUMBER	DESCRIPTION
17	99260428	Nut, #6-32 x 5/16 Keps (2 Required)
18	97008675	Plug Assembly
19	97008677	Thermostat Wire Assembly
20	97008678	Overload Wire Assembly
21	99270743	Terminal Jumper
22	99150533	Screw, #8-18 x 5/8 Ph. Pan Head
23	98006970	Grille
24	99150528	Grille Screw (2 Required)
25	99090681	Grille Logo
26	99090688	Cover Label
27	93270493	Wire Tie
28	99150470	Screw, #8-18 x 3/8 Ph. Truss Hd.

Always order replacement parts by part number - NOT key number.