BROAN®

SPECIFICATION SHEET

ERV90HC
FRESH AIR SYSTEM

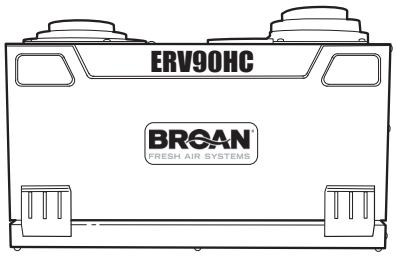

Limited Space is No Longer an Excuse

FEATURES

- 20% smaller than comparable units / Designed for applications where space is critical, such as closet and utility rooms in condominiums, apartments, and pre-fabricated homes. Also has compact footprint design for an easy fit in mechanical rooms, closets, and other tight-fit applications. A versatile solution for the most demanding applications.
- State-of-the-art compact enthalpic core slows the transfer of moisture / Performance sized for new ventilation standards and will not over-dry the house.
- Bottom door opening / Design allows easy access from any angle.
- Side (ERV90HCS) and top (ERV90HCT) port configuration / Versatile design allows for vertical or horizontal configuration, facilitating installation and maintenance (factory-configured).
- Removable electric drawer / Easy maintenance of major sub-components.
- Convenient three-mode wall control (VT4W) (Optional) (Min/Max Intermittent: 20-min. On / 40-min. Off).

GENERAL SPECIFICATIONS

- For houses up to 3,000 sq. ft.
- 44 to 99 cfm (0.4 in. w.g.)
- Voltage: 120 VAC
- Frequency: 60 Hz
- Dimensions: 12.81” x 22.56” x 19.81”
- Weight: 45 lbs
- Shipping Weight: 49 lbs
- Warranty: 2 years on parts - 5 years on core
- HVI Rated of air flow: 107 cfm
- Power Consumed (max): 150 Watts
- Supply air duct connections: 5” diameter
- Exhaust air duct connections: 5” diameter
- Filter: 30 ppi washable reticulated foam
- Cabinet: 20 ga. Pre-painted steel
- Mounting: Suspension by chains and springs
- Wall control modes: Low/High Speeds
- Power: 150 Watts
- Current: 1.3 Amps
- Continuous duty, permanently lubricated motors
- 36” power cord

® 2100 HVI CERTIFIED

c UL US

Broan-NuTone LLC Hartford, Wisconsin www.broan.com 800-558-1711

REFERENCE	QTY.	REMARKS	Project	
			Location	
			Architect	
			Engineer	
			Contractor	
			Submitted by	Date

MODEL ERV90HC
PERFORMANCE SPECIFICATIONS

Ventilation Performance

External Static Pressure		Net Supply Airflow		Gross Airflow			
				Supply		Exhaust	
Pa	In. W.g.	L/s	cfm	L/s	cfm	L/s	cfm
25	0.1	53	112	55	117	56	118
50	0.2	51	107	53	112	54	115
75	0.3	49	103	51	108	53	111
100	0.4	47	99	49	104	50	106
125	0.5	44	94	46	98	48	102
150	0.6	42	89	44	93	46	97
175	0.7	40	84	42	88	43	91
200	0.8	36	76	38	80	41	87

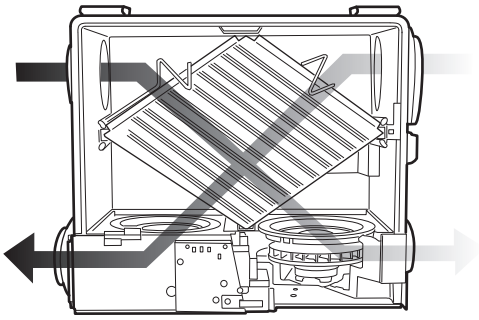

Energy Performance

	Supply Temperature		Net Airflow		Average Power	Sensible Recovery Efficiency	Apparent Sensible Effectiveness	Latent Recovery Moisture Transfer
Heating	C	F	L/s	cfm	Watts	%	%	
	0	32	22	46	70	67	82	0.60
	0	32	30	64	85	65	77	0.54
	0	32	45	91	127	61	73	0.49
	-25	-13	30	64	102	56	78	0.50
						Total Recovery Efficiency		
Cooling	35	95	23	46	68	51		

INSTALLATION OPTIONS

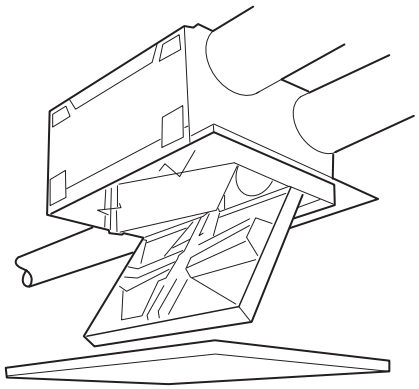

Bulkhead Installation (Mechanical Room)

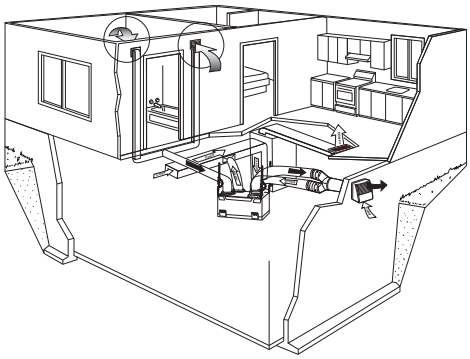

Direct Exhaust - Return Connection

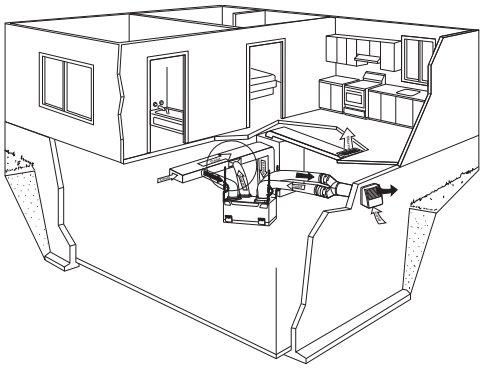

Return-Return Connection