BROAN®
NuTone®

SPECIFICATION SHEET

RDJ1
RADIATION DAMPER ACCESSORY KIT FOR VENTILATION FANS

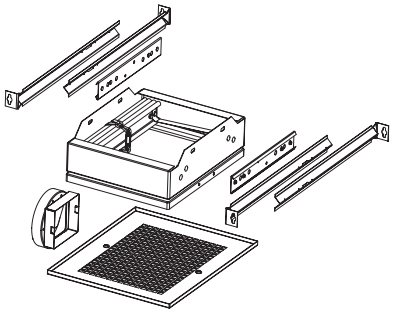

Dependable radiation dampers and attractive metal grilles. For use with Broan and NuTone ventilation fans (sold separately).

FEATURES

RADIATION DAMPER:
- For use in 1, 2 and 3 hour rated floor-ceiling and roof-ceiling constructions
- Galvanized steel frame
- High temperature, non-asbestos, reinforced fiber thermal fabric
- Stainless steel closure springs
- 165°F fusible link

GRILLE:
- Attractive steel grille painted white
- Low profile blends well with any décor

DUCT CONNECTOR:
- 4” round duct fitting with built-in backdraft damper for easy duct connection.
- Galvanized steel connector with aluminum damper

HOUSING MOUNTING HARDWARE:
- Key-holed mounting brackets span up to 24” and are adjustable horizontally and vertically

(1) RDJ1 RADIATION DAMPER ACCESSORY KIT &
(1) VENTILATION FAN MAKE A COMPLETE UNIT.
PURCHASE EACH SEPARATELY.

RDJ1 for use with the following ventilation fan models:

Broan DX90, DX110, HD50, HD80, 676, 676EX, 683, 683C, 684, 770, 784

NuTone HD50NT, HD80NT, NT080C, 50NT, 80NT, 671SP, 672SP, 684NT

TYPICAL SPECIFICATION

Radiation damper accessory kit shall be Broan/NuTone RDJ1 suitable for use with the following models:

Broan DX90, DX110, HD50, HD80, 676, 676EX, 683, 683C, 684, 770, 784

NuTone HD50NT, HD80NT, NT080C, 50NT, 80NT, 671SP, 672SP

Accessory kit shall have adjustable mounting brackets. It shall have a built-in metal backdraft damper and be ducted to a roof or wall cap.

Radiation damper shall be rated for use in up to three hour ceiling constructions. It shall be UL Classified and Warnock Hersey Listed (see other side for installation details).

CLASSIFIED

Broan-NuTone LLC Hartford, Wisconsin www.broan.com www.nutone.com 800-558-1711
Broan-NuTone Canada Mississauga, Ontario www.broan.ca www.nutone.ca 877-896-1119

REFERENCE	QTY.	REMARKS	Project
			Location
			Architect
			Engineer
			Contractor
			Submitted by Date

BROAN®
NuTone®

RDJ1 Radiation Damper Accessory Kit for Ventilation Fans

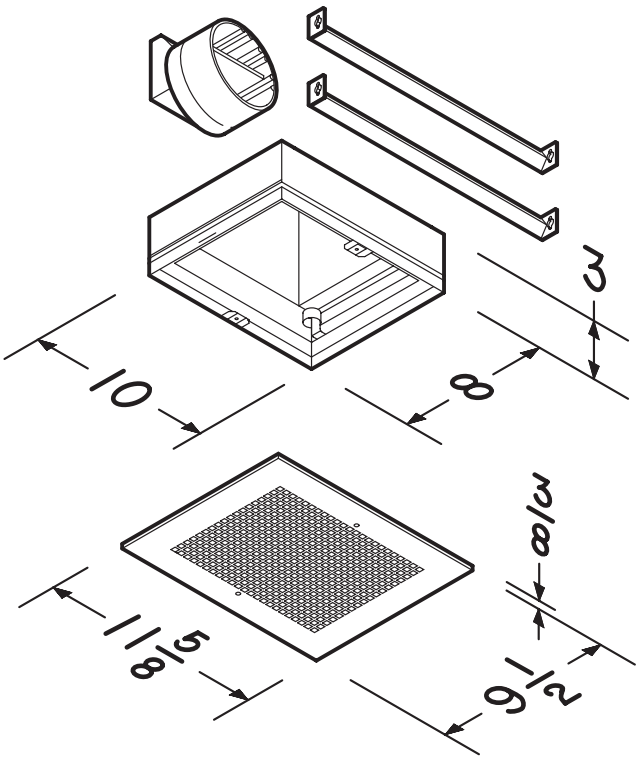

CLASSIFIED

c UL US

SEE DETAILS ON UL CLASSIFICATION MARKING ON PRODUCT

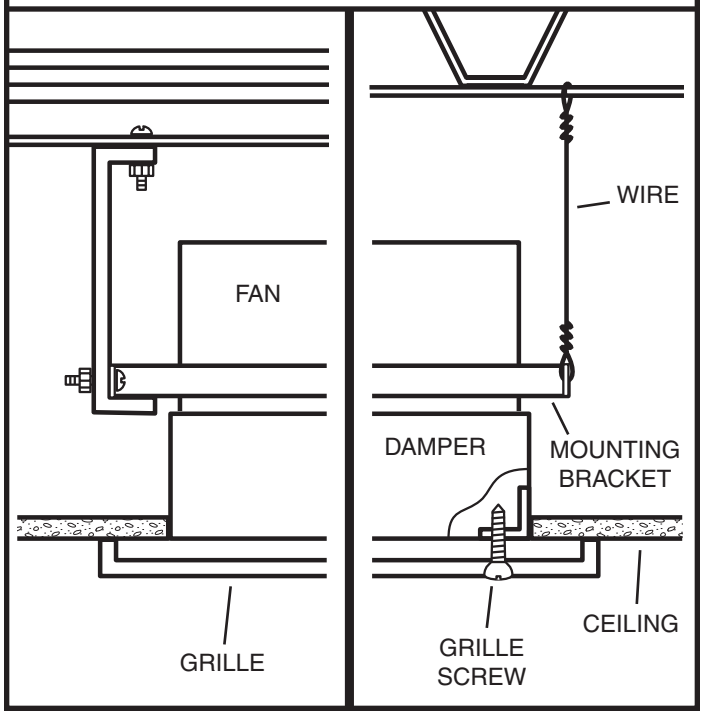

INTERTEK Warnock Hersey US
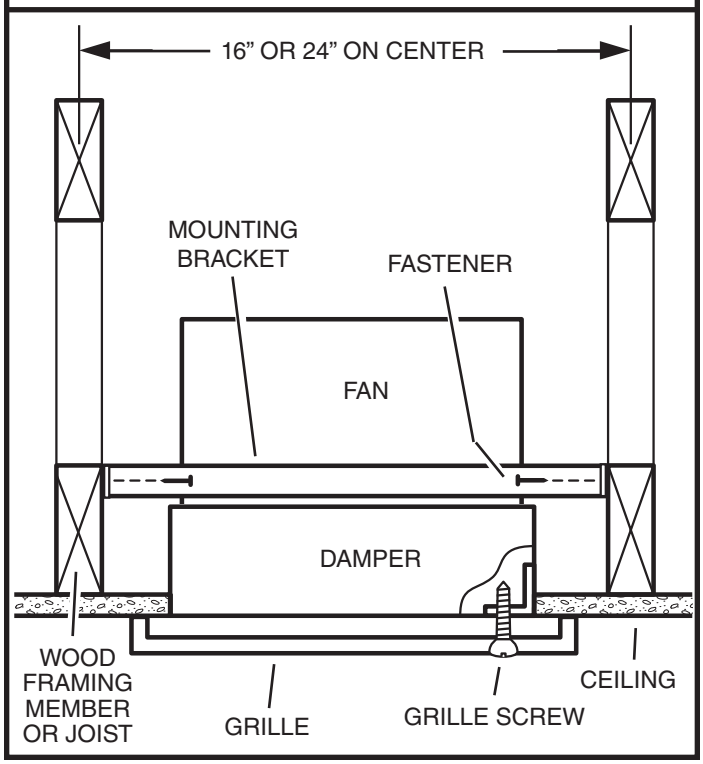
WARNOCK HERSEY LISTING INCLUDES DAMPER ONLY. IT DOES NOT INCLUDE EXHAUST FAN. DAMPERS MAY BE USED WITH UL LISTED FAN MODELS NOTED.