BROAN® Elite

SPECIFICATION SHEET

MODELS 15BLEXF, 15SSEXF
38.1 cm WIDE
TRASH COMPACTOR

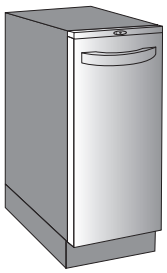

FEATURES

- 1360 kg. of continual compaction force.
- ¾ horsepower motor drives dual screw compaction system.
- Dedicated 10 Amp circuit recommended.
- Includes Type E/F (CEE 7/7) and Type G (BS 1363) cord sets
- Six (6) to one (1) compaction ratio. Compact the equivalent of six (6) 49.2 liter trash containers into one bag.
- Compact hold feature maximizes capacity of compacted trash.
- Stainless steel compacting plate with antimicrobial protective coating designed to crush cans and bottles.
- .044 m^3 bucket trash bucket holds 13.6 kg. of trash.
- Trash bucket has drop down door for easy trash removal.
- Full extension ball bearing trash bucket drawer slides for smooth action.
- Start button with ram status LED.
- Removable key switch prevents unauthorized compaction.
- Safety interlock prevents compaction when door is open.
- Bag storage compartment. Unit comes with three (3) bags.
- Manual advance odor control system. First six (6) month disk provided with trash compactor.
- Magnetic door gasket provides tight seal for quiet cycling and odor control.
- Reversible door with stainless-look trim and 170° range of motion offered in different finishes.
  - Model 15BLEXF - Black door and trim
  - Model 15SSEXF - Stainless steel door and stainless-look trim
- Textured cabinet features a durable baked epoxy finish in black (all models).
- Two (2) adjustable height leveling legs (front) and two (2) adjustable height rollers (rear) provide one (1) inch of height adjustment.

ACCESSORIES (purchased separately)

- Model 15TCTK - Toe kick kit (required for freestanding installations).
- Model 15TCBL – Twelve (12) trash bags (black).
- Model 15TCOD – One (1) odor control disk. Each disk lasts up to six (6) months.
- Model 15TCBB – Hardwood cutting board (rests on top of compactor when not installed under a counter top).

SPECIFICATIONS

Volts	Hz	AMPS	Capacity	Compaction	Weight
220-240	50-60	3.0	.044 m^3 13.6 kg.	1360 kg. 6 to 1	74.8 kg. (packaged)

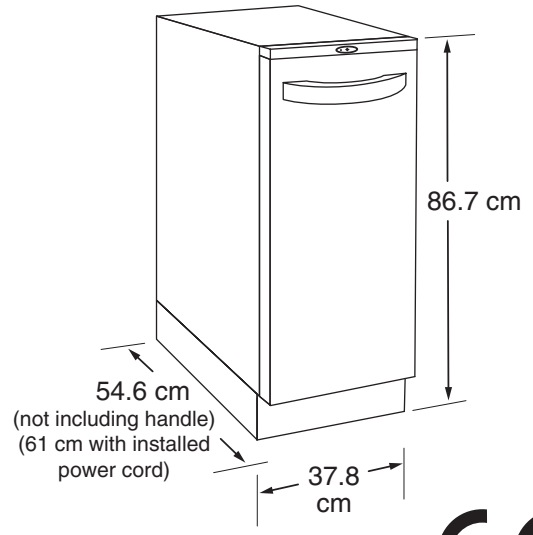

CE

Broan-NuTone LLC Hartford, Wisconsin www.broan.com 800-558-1711
Broan-NuTone Canada Mississauga, Ontario www.broan.ca 877-896-1119

REFERENCE	QTY.	REMARKS	Project
			Location
			Architect
			Engineer
			Contractor
			Submitted by Date