BROAN®

SPECIFICATION SHEET

MODEL QTR140 FAN

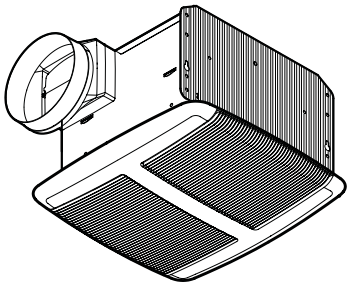

Ultra-quiet, high performance bath fan with a modern-styled grille.

FEATURES

BLOWER:
- Plug-in, permanently lubricated motor - engineered for continuous operation
- Dynamically balanced centrifugal blower wheel for quiet, efficient performance
- Low RPM for quiet operation
- Resilient anti-vibration motor mounts

HOUSING:
- Rugged, 26 gauge, galvanized steel construction
- Polymeric, 6” round duct connector with tapered sleeve and no metallic clatter
- 6” round to 4” round duct reducer included - allows connection of 4” round ductwork
- 7-5/8” height allows for 2” x 8” (nominal) joist installations
- Sturdy, easy, four-point mounting directly to joist
- Includes unique spacer (patent pending) for mounting to engineered “I” joists

GRILLE:
- Polymeric construction
- Innovative design - the result of extensive research with designers and consumers

CONTROLS (Purchase separately):
- Model 69VL (Ivory) / 69WL (White) - One rocker switch with “on” indicator light
- Other controls available from Broan-NuTone

U.L. Listed for use over bathtubs and showers when connected to a GFCI protected branch circuit (ceiling mount only).

3-Year Warranty

TYPICAL SPECIFICATION

Ceiling Ventilator shall be Broan Model QTR140.

Ceiling Ventilator shall have corrosion resistant galvanized steel housing with four-point mounting capability. It shall be ducted to a roof or wall cap using 6” round ductwork.

Blower assembly shall be removable, have a centrifugal-type blower wheel and a permanently lubricated motor designed for continuous operation and mounted with resilient anti-vibration mounts.

6” non-metallic damper/duct connector shall be included, along with a 6” to 4” duct reducer.

Air delivery shall be no less than 140 CFM and sound level no greater than 2.0 Sones, when using 6” duct connector, and 130 CFM / 2.5 Sones when using 6” to 4” duct reducer. All air and sound ratings shall be certified by HVI.

Ceiling Ventilator shall be U.L. Listed for use over bathtubs and showers when connected to a GFCI protected branch circuit.

®2100 HVI CERTIFIED

UL®

Broan-NuTone LLC, 926 West State Street, Hartford, WI 53027 (1-800-637-1453)

REFERENCE	QTY.	REMARKS	Project
			Location
			Architect
			Engineer
			Contractor
			Submitted by Date

PERFORMANCE RATINGS

MODEL QTR140
FAN

HVI PERFORMANCE

Model	Sones @0.1" Ps	CFM @0.1" Ps	
QTR140	2.0	140	w/ 6" duct connector
	2.5	130	w/ 6" to 4" duct reducer

HVI-2100 CERTIFIED RATINGS comply with new testing technologies and procedures prescribed by the Home Ventilating Institute, for off-the-shelf products, as they are available to consumers. Product performance is rated at 0.1 in. static pressure, based on tests conducted in AMCA's state-of-the-art test laboratory. Sones are a measure of humanly-perceived loudness, based on laboratory measurements.

AIR FLOW PERFORMANCE

MODEL QTR140

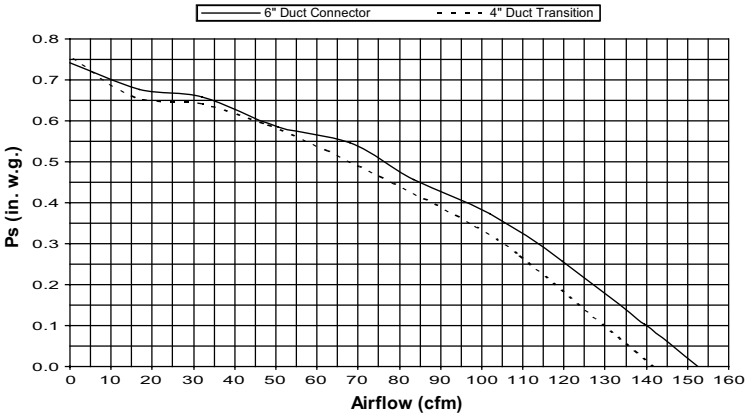

AMPS

Model	Amps
QTR140	1.4

WEIGHT

Model	Shipping Weight
QTR140	12.4 lbs.

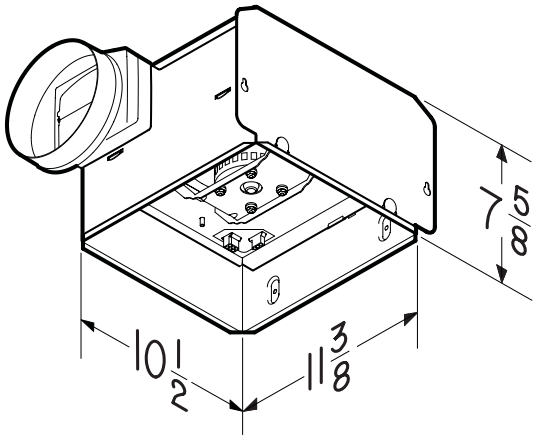

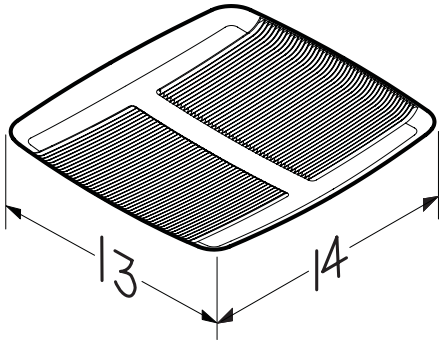

Broan-NuTone LLC, 926 West State Street, Hartford, Wisconsin 53027 (1-800-637-1453)